REPORT SUMMARY

REPORT #
T19-108

TESTED FOR
Value Windows and Doors
1830 Flower Ave.
Duarte, CA 91010

SERIES & PRODUCT TYPE
Series #70 Smart Slide - PVC SLIDING GLASS DOOR

CONFIGURATION
XO

FRAME SIZE
2997.20 mm x 2489.20 mm (118.00" x 98.00")

SPECIFICATION
NAFS - North American Fenestration Standard/specification for windows, doors, and skylights
AAMA/WDMA/CSA 101/I.S.2/A440-17

PRIMARY DESIGNATOR
CLASS LC-PG30 2997.20 x 2489.20 mm (118.00 x 98.00 in) Type: SD

TEST COMPLETION DATE
November 18, 2019

REPORT DATE
November 26, 2019

1.0 Tested For: Value Windows and Doors
1830 Flower Ave.
Duarte, CA 91010

2.0 Purpose:
The purpose of this report is to present the testing methods employed and the test results obtained during the performance testing of one (1) PVC SLIDING GLASS DOOR described in paragraph 4.0 of this report.

3.0 Test References:
3.1 NAFS - North American Fenestration Standard/specification for windows, doors, and skylights AAMA/WDMA/CSA 101/I.S.2/A440-17
3.2 ASTM F 842-17 Forced Entry Resistance Tests for Sliding Door Assemblies
3.3 CAWM 300-96 Forced Entry Test Resistance Tests for Sliding Glass Doors

4.0 Compliance Statement: The test results in paragraph 6.0 indicate that the test sample described in paragraph 5.0 of this report met the performance requirements of the above specifications for the performance grade shown in 4.1 below.
4.1 CLASS LC-PG30 2997.20 x 2489.20 mm (118.00 x 98.00 in) Type: SD

5.0 Sample Submitted:
5.1 Product Type: PVC SLIDING GLASS DOOR
5.2 Series: Series #70 Smart Slide
5.3 Configuration: XO
5.4 Product Dimensions:

	Millimeters	Inches
Total Frame:	2997.20 x 2489.20	118.00 x 98.00
Fixed Panel DLO:	1390.65 x 2378.20	54.75 x 93.63
Active Panel:	1473.20 x 2393.95	58.00 x 94.25

5.5 Glass and Glazing:

IGU Thickness	*Spacer Size*	*Interior Lite*	*Exterior Lite*	*Glazing method*
0.93" overall wide	0.56"	3/16" Tempered	3/16" Tempered	The active panel was inside gasket glazed – the IGU was set onto coextruded glazing gasket on the active panel frame full perimeter. The IGU sat on 0.09" high PVC setting block at 1/4 points on the bottom rail. PVC snap-in glazing stop was applied full perimeter on the inside and each stop contained a coextruded glazing gasket.
				The fixed panel was inside gasket glazed – the IGU was set onto coextruded glazing gasket full perimeter on the jambs, head, sill, and fixed vertical mullion. The IGU sat on 0.09" high setting block set at 1/4 points on the sill The snap-in glazing stop was applied full perimeter on the inside and each stop contained a coextruded glazing gasket.

5.6 Weepage:

Drainage Method	*Size*	*Quantity*	*Location*
Rectangular weep	1" x 0.19"	Two (2) at each end	Sill outside face - a weep was located at 4.5" and 55" from each end. Each weep contained a PVC awning weep cover.
Rectangular weep	1" x 0.19"	Two (2) at each end	Sill outside leg inboard side – a weep was located at 6.75" and 52.25" from each end. Reticulated foam was applied into each weep hole.
Weep notch	1.5"	Two (2) at each end	Sill integral full length leg that served on the fixed side as the glazing stop retainer.
Rectangular weep	1" x 0.19"	One (1) at each end	Active panel bottom rail

5.7 Pressure balancing: None

5.8 Weather-stripping:

Type	*Quantity*	*Location*
Flap vinyl	One (1) strip	Full perimeter of the active sash opening created by the lock jamb, active head, active sill, and fixed vertical mullion. The weather-strip faced in.
A self-adhering 1" x 1.5" x 0.375" foam block was applied in the active channel in line with the meeting stile.		

5.9 Sealants:

Sealant was applied at the following locations:

- The sill was sealed to the rough opening full length.
- The PVC sill snap-in extrusion applied over the sill active side and the aluminum cap applied over it were sealed at each end to the frame and the vertical mullion.
- The aluminum roller track at sill was sealed full length to the sill and up the sides at each end.
- The mullion was sealed to the frame with foam gasket at each end.

5.10 Hardware:

Type	*Quantity*	*Location*
Eight point locking, and pull-in, and handle system The rollers were part of the system and were used to pull-in the active panel to the frame	One system	The lock handle was located on the active lead stile at 40.5" from the bottom of the panel. The locking pins/bolts were located on each active stile. On the lead stile, a locking pin was located at 4", 28.75", 55", and 91.75" from the bottom. On the meeting stile, a locking pin was located at 11", 35", 59.25", and 83" from the bottom. When the lock handle was turned 180 degrees, the locking pins engaged their respective strike. Each strike was fastened with a pair of #8 x 1.25" PFH screws. The lead stile strikes were located on the lock jamb and meeting stile strikes on the vertical mullion.
		A dual roller was located at each end of the bottom rail. Integral to the rollers on the bottom rail was a separate roller that rolled on a vertical axis in the aluminum channel that was fastened to the sill. At the top rail, a single roller at each end that rolled on a vertical axis along the aluminum roller track fastened to the head and that served to pull the active panel into the frame. When the door was in the closed position and the lock handle was moved to the closed position, the lock pins on the meeting stile and the top and bottom rail roller assemblies pulled the active panel tightly into the frame.
Each roller housing on the bottom rail and on the top rail was fastened to its respective rail with four #6 x 1" PFH screws.		

5.11 Construction:

Location	*Joinery Type*	*Number of Fasteners*	*Fastener Size*
Frame corners and active panel corners	Fusion welded	N/A	N/A
The vertical mullion fit over a metal post with integral base plate at head and sill. The post base plates were each fastened to the head and sill respectively with four #6 x 1" PFH screws. The post was 4.38" high. A pair of 0.20" diameter x 4.75" PFH screws were applied through the head and sill respectively and through the base and into the vertical mullion screw races. The screws each contained a washer with rubber gasket. The mullion was sealed to the frame at each end with foam gasket. An additional flexible plastic filler fit onto a leg on the metal post.			
A PVC extrusion cover snap-fit onto the active side of the sill, the active side of the head and the active jamb to provide the surface for the active panel to seal to. At the sill, an aluminum cover was applied over this extrusion. The aluminum cover was adhered to it with double sided tape. A PVC extrusion cover was applied over the active meeting stile channel to conceal the hardware. A full-length aluminum extrusion fit into the lock stile channel and the hardware and the locking hardware fit into the extrusion. Aluminum roller channel was fastened to the head and sill with #6 x 1" PFH screws at 4" from each end and 12" on center. Aluminum extrusion was fastened to the lock jamb with #6 x 1" PFH screws 4" from each end and 12" on center.			

5.12 Reinforcement:

Material	*Part #*	*Location*
Rolled steel	249035	Vertical mullion
Rolled steel	209294	Active panel – all four sides
Rolled steel	229037	Quantity of two (2) in Frame on all four sides
At the sliding panel, #6 x 1" PFH screws were applied through the glazing pocket and into the reinforcement at 3" from each end and approximately 24" on center.		

5.13 Installation:

Location on frame	*Anchor type*	*Spacing*
The sill was set in silicone and was fastened with six (6) metal "L" clips. Each clip had a 2" horizontal leg and 1" vertical leg. Each horizontal leg was anchored to the rough opening with a pair of #8 x 1.75" PPH screws. Each vertical leg was fastened to the inside face of the sill with a #8 x 1.25" PPH screw.		
Applied through the head and jambs and into 2" x 10" wooden rough opening	#12 x 4.75" Star drive flat head	6" from each end and approximately 7" on center.

6.0 - Test procedures and results: All testing procedures were performed in accordance with the performance requirements of the test specifications referenced in paragraph 3.0 of this report. The number preceding each test listed below refers to the corresponding section in the NAFS.

9.3.1 – Operation Force (ASTM E2068-00(2016))

Test Description	Results	Allowed	Comments
Maximum force to initiate motion	17.79 N (4.00 lbf)	180 N (40.47 lbf)	
Maximum force to maintain motion	13.34 N (3.00 lbf)	115 N (25.85 lbf)	
Latching device force	97.86 N (22.00 lbf)	100 N (22.48 lbf)	

9.3.2 – Air Infiltration (ASTM E283-04(2012))

Test Description	Results	Allowed	Comments
75 Pa differential pressure	0.05 L/s*m²	1.5 L/s*m²	
1.57 psf differential pressure	0.01 cfm/ft²	0.30 cfm/ft²	
The tested specimen meets the performance levels specified in AAMA/WDMA/CSA 101/I.S.2/A440 for air leakage resistance.			

9.3.3 – Water Penetration (ASTM E547-00(2016))

Test Description	Results	Allowed	Comments
DP40 - 290 Pa (6.06 psf)	No water penetration	No water penetration	1

9.3.4.2 – Uniform Load Deflection at Design Pressure (ASTM E330-14)

Test Description	Results	Allowed	Comments
DP30 - 1440 Pa (30.08 psf)Pos	25.15 mm (0.99")	Report only	2
DP30 - 1440 Pa (30.08 psf)Neg	22.86 mm (0.90")	Report only	2

9.3.4.3 – Uniform Load Structural at 1.5 x Design Pressure (ASTM E330-14)

Test Description	Results	Allowed	Comments
OL for DP30 - 2160 Pa (45.11 psf)Pos	0.51 mm (0.02")	8.38 mm (0.33")	2
OL for DP30 - 2160 Pa (45.11 psf)Neg	0.00 mm (0.00")	8.38 mm (0.33")	2

9.3.5 – Forced Entry Resistance (ASTM F842-17 & CAWM 300-96)

Test Description	Results	Allowed	Comments
ASTM F842 Type A D and CAWM Type I	No Entry	No Entry	

9.3.6.2 – Thermoplastic Weld Test

Test Description	Results	Allowed	Comments
Frame and Sash Corners	Passed	Break shall not extend along the entire weld line	

9.3.6.3 – Deglazing Test

Test Description	Results	Allowed	Comments
Active Sash Pull Stile - 320 N (71.94 lbf)	4%	Less than 90% of glazing bite	
Active Sash Rail - 230 N (51.71 lbf)	3%	Less than 90% of glazing bite	

Comment #1 - Tested without insect screenThe door also passed at a higher level than the overall rating.
Comment #2 – Deflection measurement taken from vertical mullion.
Testing was witnessed by: Jim Cruz and Daniel Orosco with FTL and Bensen Xie with Value Windows and Doors.

For a complete description of the tested sample, refer to the attached eleven (11) pages consisting of a bill of materials, cross section drawings, individual die drawings, as provided by the manufacturer to this laboratory and a photograph taken by FTL. This report is complete only when all the above referenced bill of materials, drawings, and photograph are attached.

The bill of materials, cross section drawings, die drawings of frame and sash members and photograph are on file and have been compared to the sample submitted. Test sample sections, bill of materials, drawings, photo and a copy of this report will be retained at the test laboratory for four years.

This test report may not be modified in any way without the written consent of Fenestration Testing Laboratory, Inc. (FTL).

The preceding test results relate only to the tested specimen and were obtained by using the applicable test methods listed in section 3.0 and 6.0 above. This report does not constitute certification of this product or an endorsement by this laboratory. It is the property of the client named in section 1.0 above. Certification can only be granted by an approved administrator and/or validator.

Test Completion Date: November 18, 2018

Report Completion Date: November 26, 2018

Pete Cruz - Test Engineer

Jim Cruz – Laboratory Manager

CUSTOMER NAME:	Value Windows & Doors	Series #:	70
Sectional Drawing	Eurotek Smart Slide Door		

BOM

The window size :

INDEX	PART NUMBER	DESCRIPTION	QTY	VENDOR	MATERIAL
1	109091	Main Frame 56mm X 140mm	4	ALUPLAST	PVC
2	149345	Mullion 104mm x 70mm	1	ALUPLAST	PVC
3	249035	Steel Reinforcement for Mullion	1	ALUPLAST	Galvanized iron
4	109394	Smart Slide Sash 97mm x 70mm	4	ALUPLAST	PVC
5	209294	Steel Reinforcement for Sash	4	ALUPLAST	Galvanized iron
6	109291	Cover Profile	4	ALUPLAST	PVC
7	229037	Steel Reinforcement for Frame	8	ALUPLAST	Galvanized iron
8	207295	Aluminum Leading Rail	1	ALUPLAST	Anodized Aluminum
9	207296	Aluminum Guiding Rail	1	ALUPLAST	Anodized Aluminum
10	100294	Cover Profile	1	ALUPLAST	PVC
11	120836	Glazing Bead	8	ALUPLAST	PVC
12	207293	Aluminum Striker profile	1	ALUPLAST	Anodized Aluminum
13	207292	Aluminum Gear Groove	1	ALUPLAST	Anodized Aluminum
14	T140045/sl/fix	Mullion connector	2	GKG	Steel

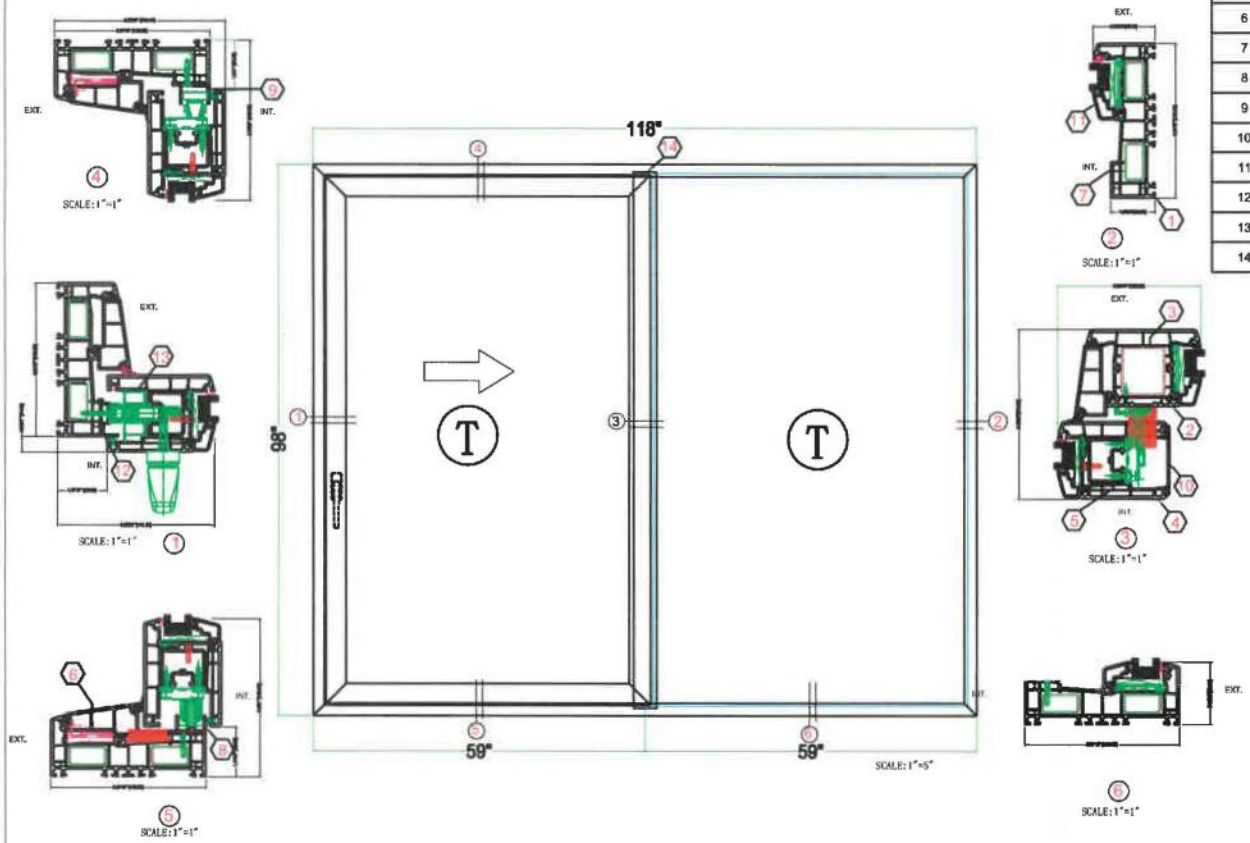

FENESTRATION TESTING LAB
REPORT NO: T19-108
DATE: 12/24/19

Standerd		Sectional Area		Unspec		Designed		Checked		File No:	
Material	PVC	Theor.Weight		TK.Talerance		Drawn	Kawser	Approved		Value WINDOWS & DOORS	
							Bensen	Mapping	11/25/2019		

CUSTOMER NAME:	Value Windows & Doors	Series #:
Sectional Drawing	109091	

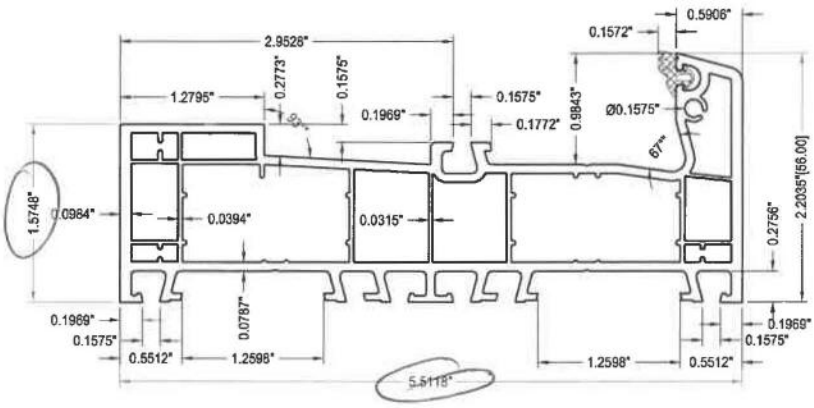

SCALE: 1 =1

Standerd		Sectional Area		Unspec		Designed		Checked		File No:
Material	PVC	Theor.Weight		TK.Tolerance		Drawn		Approved		

Value WINDOWS & DOORS

FENESTRATION TESTING LAB
REPORT NO: T9-108
DATE: 12/24/19

CUSTOMER NAME:	Value Windows & Doors	Series #:
Sectional Drawing	149345	

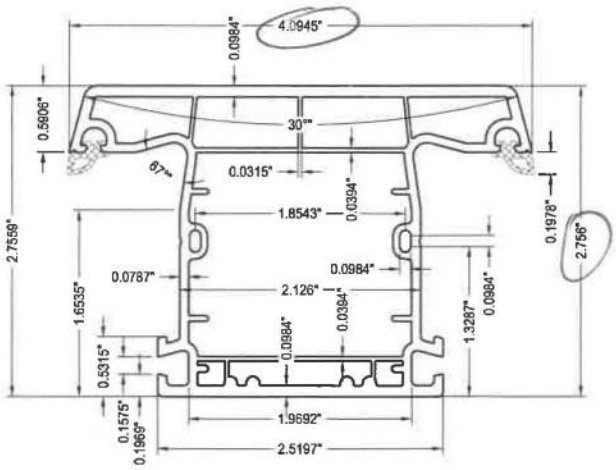

SCALE: 1 =1

Standerd		Sectional Area		Unspec		Designed		Checked		File No:
Material	PVC	Theor.Weight		TK.Tolerance		Drawn		Approved		

Value WINDOWS & DOORS

FENESTRATION TESTING LAB
REPORT NO: T9-108
DATE: 12/24/19

CUSTOMER NAME:	Value Windows & Doors	Series #:
Sectional Drawing	109394	

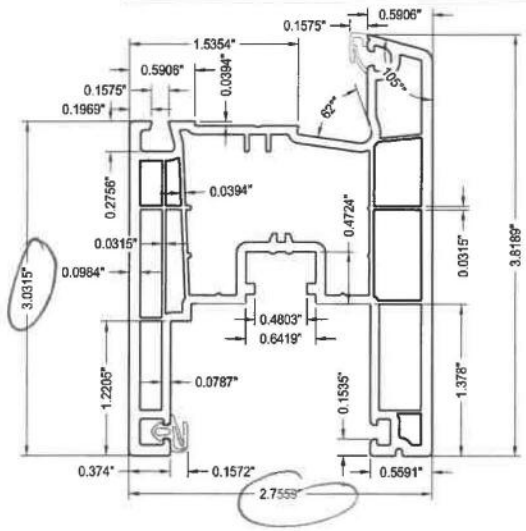

SCALE: 1 =1

Standerd		Sectional Area		Unspec		Designed		Checked		File No:
Material	PVC	Theor.Weight		TK.Tolerance		Drawn		Approved		

SCALE:4"=1" Value WINDOWS & DOORS

FENESTRATION TESTING LAB
REPORT NO: 779-108
DATE: 12/24/19

CUSTOMER NAME:	Value Windows & Doors	Series #:
Sectional Drawing	100294	

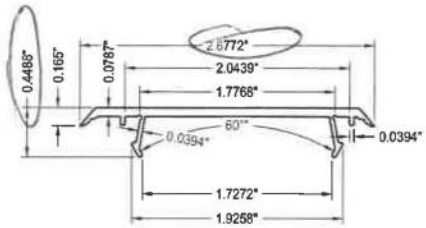

SCALE: 1 =1

Standerd		Sectional Area		Unspec		Designed		Checked		File No:
Material	PVC	Theor.Weight		TK.Tolerance		Drawn		Approved		

Value WINDOWS & DOORS

FENESTRATION TESTING LAB
REPORT NO: 779-108
DATE: 12/24/19

CUSTOMER NAME:	Value Windows & Doors	Series #:
Sectional Drawing	209294	

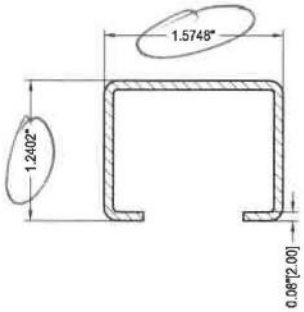

SCALE:1 =1

Standerd		Sectional Area		Unspec		Designed		Checked		File No:	
Material	Galvanized iron	Theor.Weight		TK.Tolerance		Drawn		Approved			

FENESTRATION TESTING LAB
REPORT NO: 79-108
DATE: 12/24/19

CUSTOMER NAME:	Value Windows & Doors	Series #:
Sectional Drawing	120836	

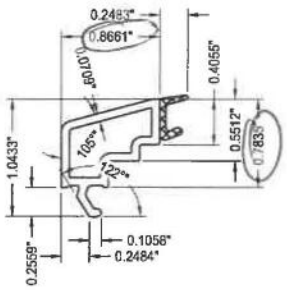

SCALE:1 =1

Standerd		Sectional Area		Unspec		Designed		Checked		File No:	
Material	PVC	Theor.Weight		TK.Tolerance		Drawn		Approved			

FENESTRATION TESTING LAB
REPORT NO: 79-108
DATE: 12/24/19

CUSTOMER NAME:	Value Windows & Doors	Series #:
Sectional Drawing	109291	

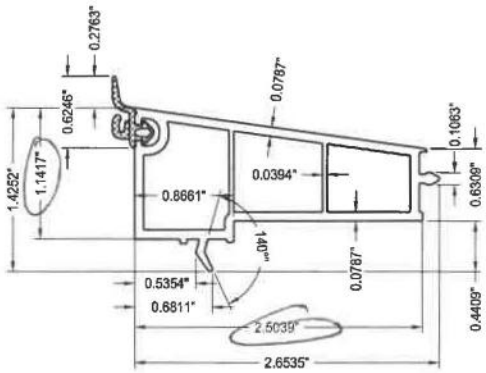

SCALE:1 =1

Standerd		Sectional Area		Unspec		Designed		Checked		File No:
Material	PVC	Theor.Weight		TK.Talerance		Drawn		Approved		

FENESTRATION TESTING LAB
REPORT NO: T19-108
DATE: 12/24/19

CUSTOMER NAME:	Value Windows & Doors	Series #:
Sectional Drawing	207295	

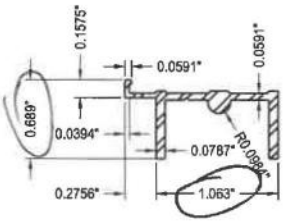

SCALE:1 =1

Standerd		Sectional Area		Unspec		Designed		Checked		File No:
Material	Aluminum	Theor.Weight		TK.Talerance		Drawn		Approved		

FENESTRATION TESTING LAB
REPORT NO: T19-108
DATE: 12/24/19

CUSTOMER NAME:	Value Windows & Doors	Series #:
Sectional Drawing	207296	

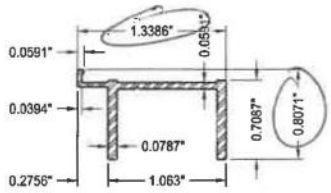

SCALE:1 =1

Standerd		Sectional Area		Unspec		Designed		Checked		File No:
Material	Aluminum	Theor.Weight		TK.Talerance		Drawn		Approved		

FENESTRATION TESTING LAB
REPORT NO: 719-108
DATE: 12/24/19

CUSTOMER NAME:	Value Windows & Doors	Series #:
Sectional Drawing	207293	

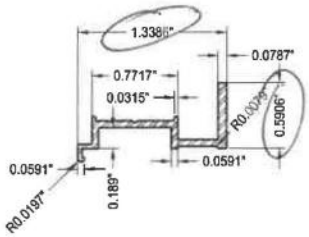

SCALE:1 =1

Standerd		Sectional Area		Unspec		Designed		Checked		File No:
Material	Aluminum	Theor.Weight		TK.Talerance		Drawn		Approved		

FENESTRATION TESTING LAB
REPORT NO: 719-108
DATE: 2/3/2020

CUSTOMER NAME:	Value Windows & Doors	Series #:
Sectional Drawing	229037	

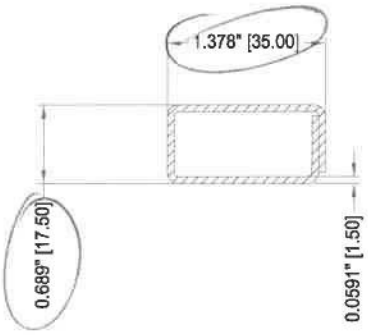

SCALE: 1 =1

Standerd		Sectional Area		Unspec		Designed		Checked		File No:
Material	Galvanized Iron	Theor.Weight		TK.Talerance		Drawn		Approved		Value WINDOWS & DOORS

FENESTRATION TESTING LAB
REPORT NO: T19-108
DATE: 12/24/19

CUSTOMER NAME:	Value Windows & Doors	Series #:
Sectional Drawing	249035	

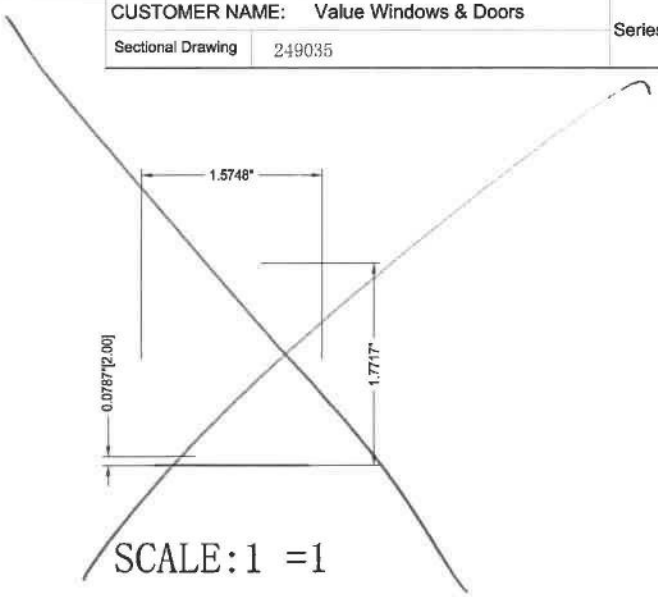

SCALE: 1 =1

Standerd		Sectional Area		Unspec		Designed		Checked		File No:
Material	Galvanized Iron	Theor.Weight		TK.Talerance		Drawn		Approved		Value WINDOWS & DOORS

CUSTOMER NAME:	Value Windows & Doors	Series #:	
Sectional Drawing			

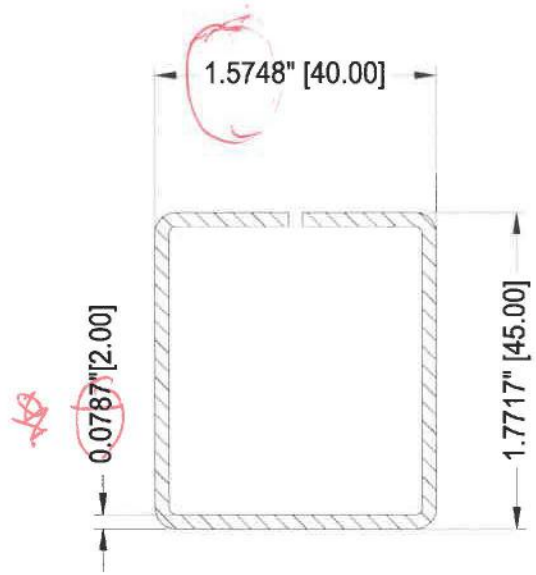

FENESTRATION TESTING LAB
REPORT NO: TK9-108
DATE: 12-24-19

SCALE : 1″=1″

Standerd		Sectional Area		Unspec		Designed		Checked		File No:	249035
Material	Galvanized iron	Theor.Weight		TK.Talerance		Drawn		Approved		Value WINDOWS & DOORS	

CUSTOMER NAME:	Value Windows & Doors	Series #:
Sectional Drawing	207292	

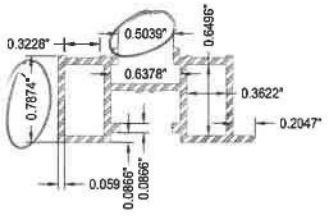

SCALE: 1 =1

Standerd		Sectional Area		Unspec		Designed		Checked		File No:
Material	Aluminum	Theor.Weight		TK.Tolerance		Drawn		Approved		

Value WINDOWS & DOORS

FENESTRATION TESTING LAB
REPORT NO: T79-108
DATE: 2/3/2020

CUSTOMER NAME:	Value Windows & Doors	Series #:
Sectional Drawing	T140045 si fix	

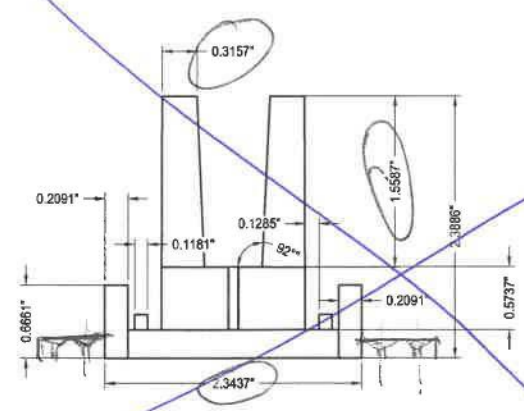

SCALE: 1 =1

Also - See photos
Qty of 2

Standerd		Sectional Area		Unspec		Designed		Checked		File No:
Material	PVC	Theor.Weight		TK.Tolerance		Drawn		Approved		

Value WINDOWS & DOORS

FENESTRATION TESTING LAB
REPORT NO: T79-108
DATE: 2/3/2020

CUSTOMER NAME:	Value Windows & Doors	Series #:	
Sectional Drawing	T140045/si/fix		

FENESTRATION TESTING LAB
REPORT NO: T19-108
DATE: 2/10/2020

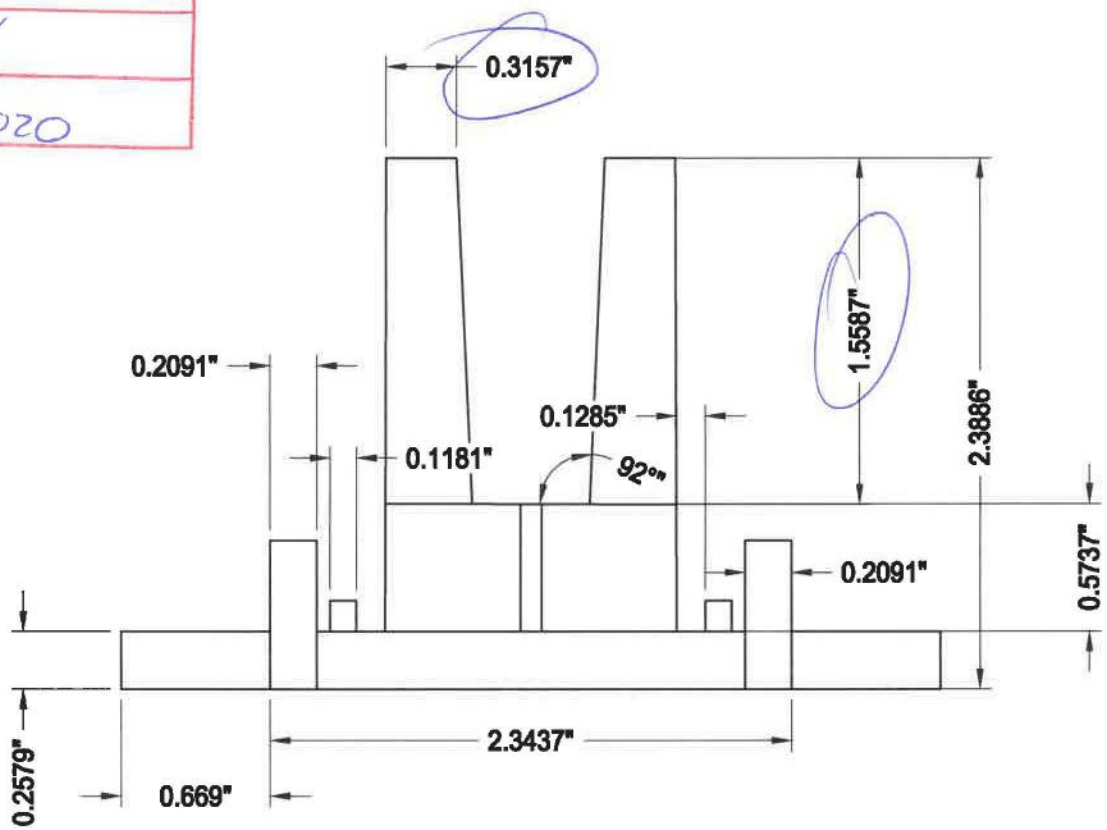

SCALE: 1″=1″

SEE photo of part

Standerd		Sectional Area		Unspec		Designed		Checked		File No:	
Material	PVC	Theor.Weight		TK.Talerance		Drawn		Approved		Value WINDOWS & DOORS	

FENESTRATION TESTING LAB

REPORT NO: 119-108

DATE: 2/10/2020

PVC	Theor.Weight	Section Area	TK.Tolerance	Unspec	Drawn		Approved	

Value WINDOWS & DOORS